IJARCCE ISSN (O) 2278-1021, ISSN (P) 2319-5940

International Journal of Advanced Research in Computer and Communication Engineering

Impact Factor 7.39 ⁜ Vol. 11, Issue 3, March 2022

DOI: 10.17148/IJARCCE.2022.11383

CONTROLLING PC FAN SPEED USING ARDUION AND DHT11 TEMPERATURE SENSOR

Shantanu Kamthe[1], Om Kale[2], Sairaj Rakshale[3], Vaishnav Khandale[4], Lect. Ashwini Patil[5]

[1,2,3,4]Student, Dept. of Computer Technology, B.V.J.N.I.O.T, Pune, Maharashtra, India.

[5]Lecturer, Dept. of Computer Technology, B.V.J.N.I.O.T, Pune, Maharashtra, India.

Abstract: There are two different cooling systems used in computer systems. One specifically used to maintain the temperature of processor and the second for maintaining the overall temperature and ventilation of computer system. To cool the processor variety of cooling systems are available in the market, but for ventilation and overall temperature of computer system only basic cooling is available in the market. So integrating the ventilation system with temperature sensors to regulate the speed of exhaust and intake fan can make computer systems more reliable with increased cooling & power efficiency.

Keywords: Temperature, Cooling, Ventilation, Sensor

I. INTRODUCTION

Overcooling and Overheating are two contradictory problems experienced in computer hardware. All three low-end, mid-end and high-end ranged computers face these problems. This may show some massive advantages and disadvantages in the performance of a computer system. With the massive variation in the climatic conditions worldwide, different regions experience variety of temperatures scaling from -40 degree Celsius to all the way up to 40 degree Celsius and computers with a neutral cooling system are not reliable option for all this different places around the globe. Regions with high temperature may require computers with more efficient and powerful cooling system, where on the other hand regions with cold temperature can run computers on very basic cooling system Example: In India a computer may work efficiently in monsoon and winter with a basic cooling system but the same computer may experience heating and performance decrease in summer. In Computers, for the proper and smooth working of the machine and to avoid heating, Cooling systems are used. Cooling systems present inside a computer are of two different types, a Processor cooling system and an air ventilation system.

We are concerned towards making the present air ventilation system more advance and power efficient by integrating some extra electronic components in form of hardware using Arduino Uno Micro controller and DHT11 temperature sensor, our objective is to build a cost efficient hardware that can be integrated in any computer. This hardware will control the air ventilation fan speed as per the increasing and decreasing of temperature inside the computer cabinet This project is concerned with building an efficient and dynamic air ventilation system. The hardware is constructed using different

II. OBJECTIVE

- Our objective was to build a hardware device that can be integrated with any computer system and enhance the cooling process inside the computer cabinet.
- The sensor should be able to get accurate temperature readings.
- The hardware should be able to adjust the RPM of the fan according to the temperature.

III. PROPOSED SYSTEM

The proposed system contains a circuit consisting a microcontroller, lcd display, temperature sensor, MOSFET . This circuit is moulded into a plastic box making it a complete packed piece of hardware which can be integrated with the computer.

The circuit draws power from the motherboard of the computer and the micro controller is powered by a external battery. The fans inside the computer cabinet are connected with the circuit. This system works when the computer is turned ON. The temperature sensor takes the reading of temperature inside the computer cabinet and then the microcontroller

IJARCCE ISSN (O) 2278-1021, ISSN (P) 2319-5940

International Journal of Advanced Research in Computer and Communication Engineering

Impact Factor 7.39 ⁜ Vol. 11, Issue 3, March 2022

DOI: 10.17148/IJARCCE.2022.11383

processes the readings from the temperature sensor and then gives output to the fan accordingly. The microcontroller is programmed and the temperature and its corresponding fan speed is already present int the microcontroller.

Construction of the system :

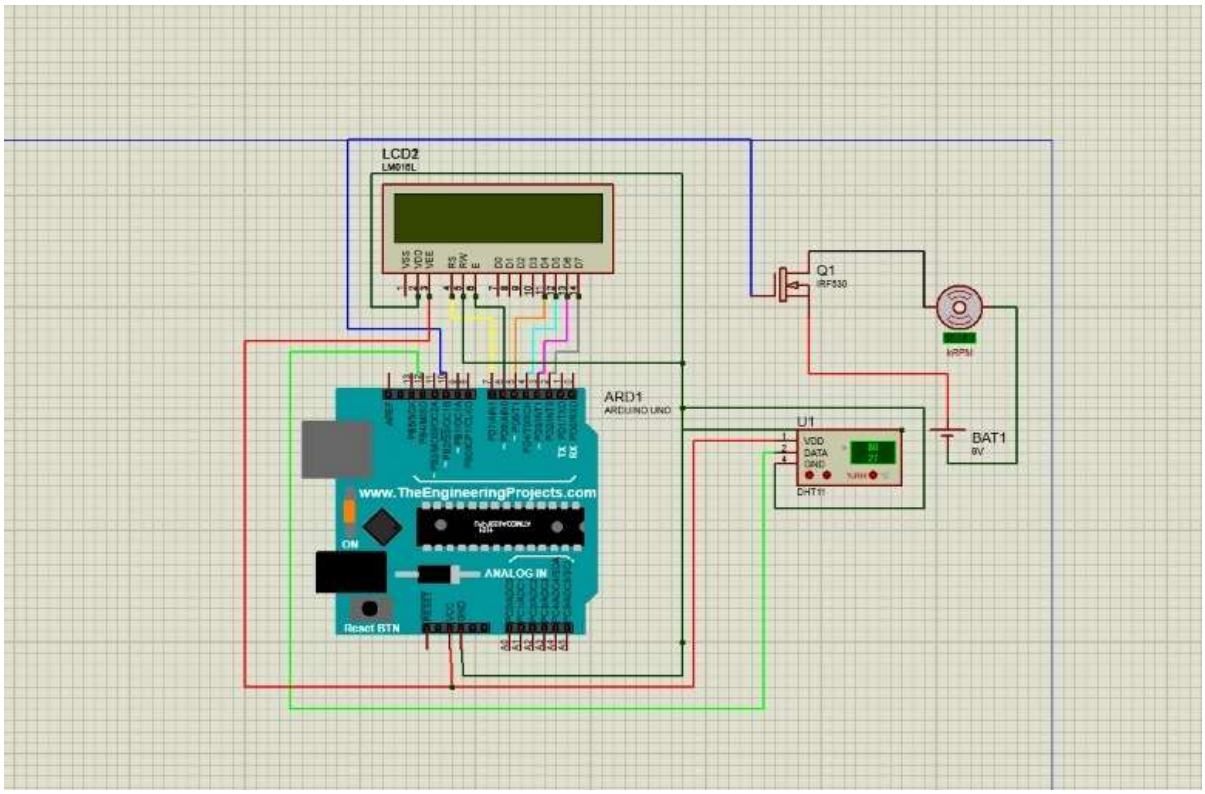

Circuit Diagram 1

The circuit has Arduino uno R 3 microcontroller, a 16 X 2 LCD display, DHT11 temperature sensor, IRF530N N-Channel MOSFET , 9 volts battery and 12 volts dc Fan. All the electronic components are connected to microcontroller. The colourful lines in the circuit diagram 1 are representing the jumper cables or wires which are used to connect the different electronic components to the microcontroller. The RED and BLACK wires are positive and negative terminals or voltage and ground wire. Arduino board can produce maximum 5 volts of output which powers the lcd display, temperature sensor .The fan is connected to a external power source because the input voltage of fan is 12 volts and the max output voltage of Arduino is less then optimal voltage required to rotate the fan.

- Here the MOSFET works as an on/ off switch, the gate of the MOSFET receives direct signal from the Arduino board. The gate to the MOSFET is connected to a digital PWM(Pulse Width modulation) enabledpin of the Arduino board.
- The DHT11 temperature sensor data pin is connected to one of the digital pin of Arduino board.
- The LCD display is connected to 6 digital pins of the Arduino board.

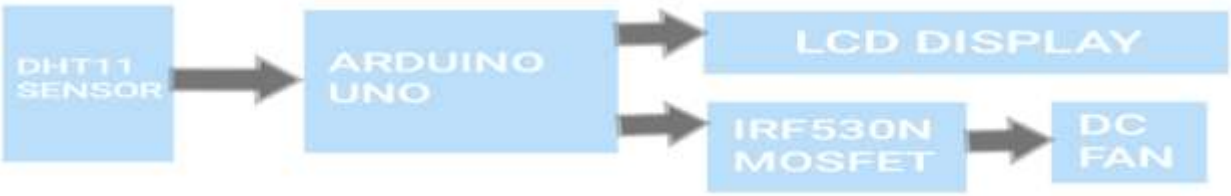

Block Diagram 2

The block diagram is helpful in understanding the working of the circuit used in the hardware. The data processing and the output data is shown in the block diagram 2. When the circuit is connected to power supply or directly connected to the motherboard of computer, the temperature sensor starts taking reading from the surrounding environment. Then the

DOI: 10.17148/IJARCCE.2022.11383

data collected by the temperature is sent to the microcontroller. The microcontroller already has set of program which is used by the microcontroller to process the data. The program contains the instructions about what output should be given when specific reading from the temperature sensor is received. There are 2 output devices present int the circuit
LCD display and the DC fan. The LCD display receives digital input from the Arduino board, while the DC fan receives analogue input. Between the microcontroller and the DC fan IRF530N MOSFET is used, it works as a switch and receives signal from the microcontroller PWM data pin. The gate of the MOSFET is connected to the microcontroller and the source and drain to the positive and negative terminals of the DC fan. The MOSFET handles the process of increasing and decreasing the voltage so the RPM of the fan can be controlled according to the temperature.

IV. COMPONENTS USED

NAME OF THE COMPONENT	QUANTITY	DESCRIPTION
Arduino Uno R3	1	Arduino UNO R3 is a microcontroller embedded circuit based on ATmega328P. It has 14 digital input/output pins. 6 pins can be used for PWM outputs and 6 for analog inputs.
LCD Display 16 X 2	1	16×2 LCD has 16 Columns and 2 Rows. It is used to display alpha numeric values.
DHT11 Sensor	1	The DHT11 is a digital temperature and humidity sensor. It uses a capacitive humidity sensor and a thermistor to measure the temperature, and dilevers a digital signal on the data pin.
IRF530N MOSFET	1	MOSFET uses silicon processes, designers get a wide portfolio of devices to support various applications like DC motors, inverters, SMPS, lighting, load switches.
Jumper cables	15	-
Bread board	1	-
12 volts DC Fan		

V. PROGRAM/SKETCH

The Arduino board is programable embedded system which can store sets of instruction or programs to perform various task on the electronic components like taking the readings from sensors and controlling motors, light bulbs, LED's, etc.
In this project we have used sets of instructions that are stored on the Arduino board. The Arduino board can easily be programmed by using the Arduino IDE software provide by the developers of the Arduino board. The program is called sketch in the Arduino IDE and the syntax of the sketch is similar to c++. The Arduino board can be connected to any computer device with a standard USB port. The code/sketch must be compile and then uploaded to the arduino board to use it for our desired operations. The following code/sketch is been used in our project.

VI. RESULT

The Arduino board and the other electronic components in the circuit including DHT11 temperature sensor and the MOSFET is packed inside a plastic container. The LCD display is fitted on the top of the plastic container. The hardware container has 2 pins which are connected to the motherboard fan header and the fan connector respectively.
When we turn ON the computer the hardware starts its processing. The hardware is programmed to adjust the Fan RPM as per the increasing and decreasing temperature. Currently the hardware has 3 modes for the fan speed for the specified temperature range. In the beginning the sensor takes the temperature reading if the temperature is below 35 degrees Celsius, then the fan remains OFF at 0% speed. If the temperature is more than 36 degrees Celsius then the fan starts to rotate at 50% speed. Till the temperature is below 38 degrees Celsius the fan continues to rotate at 50% speed and when the temperature exceeds the 39 degrees Celsius mark the fan rotates at the maximum capacity with 100% fan speed

IJARCCE ISSN (O) 2278-1021, ISSN (P) 2319-5940

International Journal of Advanced Research in Computer and Communication Engineering

Impact Factor 7.39 ⁜ Vol. 11, Issue 3, March 2022

DOI: 10.17148/IJARCCE.2022.11383

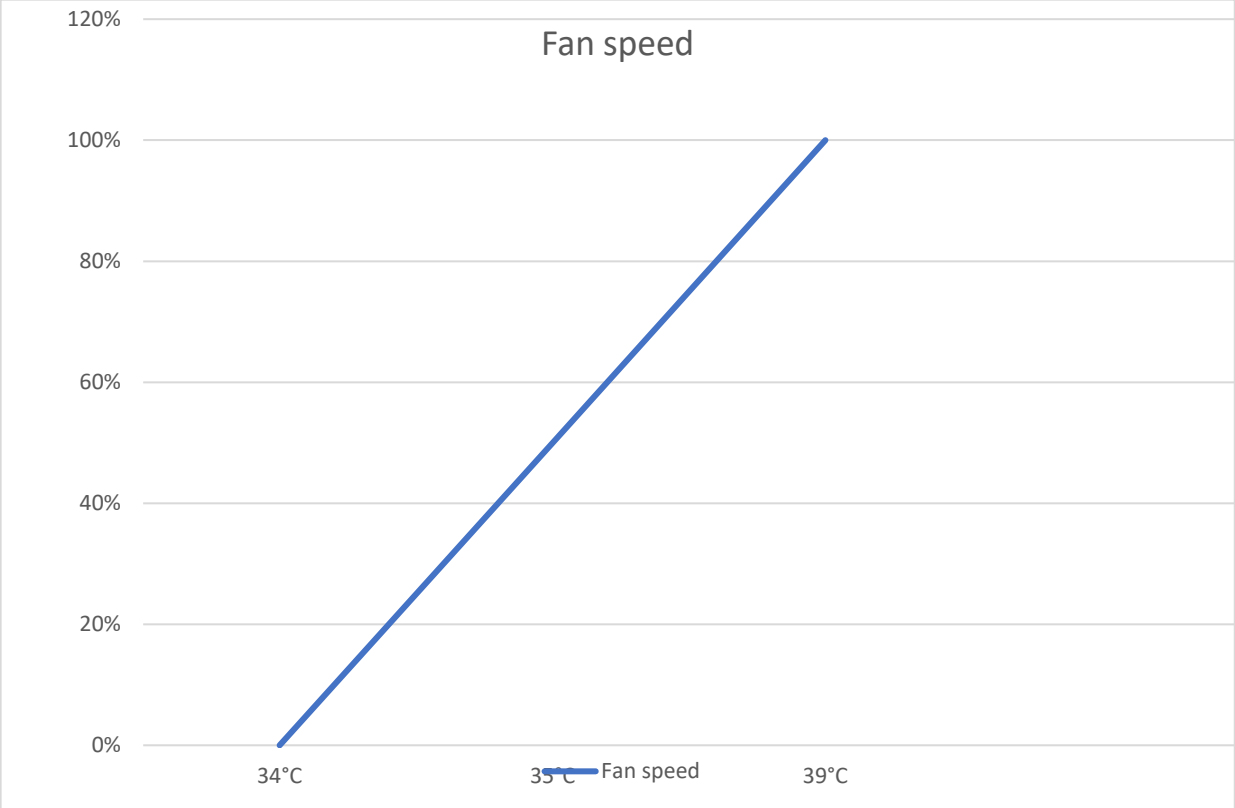

VII. CONCLUSION

As we know there are two types of cooling system used in the computer cabinet. The first one is used to cool the processor and the second is used to maintain the air flow inside the cabinet or to maintain the overall temperature of components inside the computer cabinet. The hardware which we built to enhance the air ventilation system makes the computer air flow more dynamic. As the working condition of the computer may vary in different regions and different climate of that regions. The hardware can precisely control the air flow according to the need of the machine. The hardware is pre programmed in the way that the fan RPM will be increased or decrease as the temperature inside the computer cabinet increases or decreases. The circuit is fitted inside a plastic container and can be integrated inside the computer cabinet. The hardware is connected to the mother board of the computer. The hardware starts it functioning when the computer is turned On, it also shows significant enhancement in the cooling process of the computer.

VIII. FUTURE SCOPE

The current hardware can be upgraded with some extra ports and connectors. More number of fan header connection can be added to the hardware container. The display can be changed and a more advanced display can be used. The Arduino board can be powers directly for motherboard instead of a 9 volts battery. The hardware can be made more compact by using smaller display and other smaller variants of Arduino board.

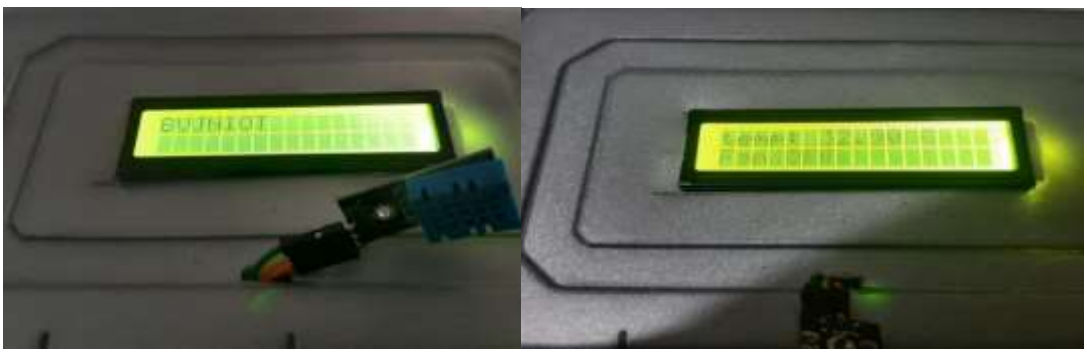

IJARCCE ISSN (O) 2278-1021, ISSN (P) 2319-5940

International Journal of Advanced Research in Computer and Communication Engineering

Impact Factor 7.39 ⁜ Vol. 11, Issue 3, March 2022

DOI: 10.17148/IJARCCE.2022.11383

IX. BIOGRAPHY

Student- **Mr. Shantanu Kamthe,**
Dept. of Computer Technology,
B.V.J.N.I.O.T, Pune.

Student- **Mr. Om Kale,**
Dept. of Computer Technology,
B.V.J.N.I.O.T, Pune.

Student- **Mr. Sairaj Rakshale**,
Dept. of Computer Technology,
B.V.J.N.I.O.T, Pune.

Student- **Mr. Vaishnav Khandale**,
Dept. of Computer Technology,
B.V.J.N.I.O.T, Pune.

International Journal of Advanced Research in Computer and Communication Engineering

Impact Factor 7.39 ⁜ Vol. 11, Issue 3, March 2022

DOI: 10.17148/IJARCCE.2022.11383

Lecturer – **Mrs. Ashwini Patil,**
Dept. of Computer Technology,
B.V.J.N.I.O.T, Pune

X. REFERENCES

1. OGU EMMANUEL, EKUNDAYO JOHN, OYETESU OLUMIDE, TEMPERATURE CONTROL SYSTEM 2011.
2. Adel Alaraifi, The Applications and Impact of Sensor- Based Information Systems in Data Centers 2019
3. Swetha, Ilakkiya SN, Nevetha, Sarathy, Deepa R, Automatic Room Temperature and Monitoring System Using Arduino 2019
4. Piotr Marek Markowski, Mirosław Gierczak, and Andrzej Dziedzic, Modelling of the Temperature Difference Sensors to Control the Temperature Distribution in Processor Heat Sink. 2019
5. Ayesha Siddika, Sayeda Farzana Nasrin, DESIGN AND DEVELOPMENT OF ARDUINO BASED AUTOMATIC FAN CONTROL SYSTEM USING PIR AND LM 35 SENSOR. 2018
6. Website : Create.arduino.cc Link : https://create.arduino.cc/projecthub/Monstermotte/make-a-fan-controller-with-arduino-b5436d
7. Website : www.hackerearth.com Link : https://www.hackerearth.com/blog/developers/arduino-programming-for-beginners/
8. Website :www.arduino.cc Link: https://www.arduino.cc/en/Guide/ArduinoUno
9. Website :www.arduino.cc Link: https://www.arduino.cc/en/software
10. Website :circuitdigest.com Link: https://circuitdigest.com/arduino-projects MAKE: GETTING STARTED WITH SENSORS (KARVINEN) Shroff Publishers. Author KARVINEN
11. Getting Started with Sensors: Measure the World with Electronics, Arduino, and Raspberry Pi Authors : Kimmo Karvinen, Tero. Publisher : Maker Media, Inc, 2014.
12. Programming Arduino: Getting Started with Sketches Author: Simon Monk , Publisher: McGraw Hill Professional, 2016.